FRAME: 56C	HP:	RPM:	PHASE: 3	VOLT: 230/460V	ENCL: TEFC	FREQ: 60 Hz	FLA:	LRA:

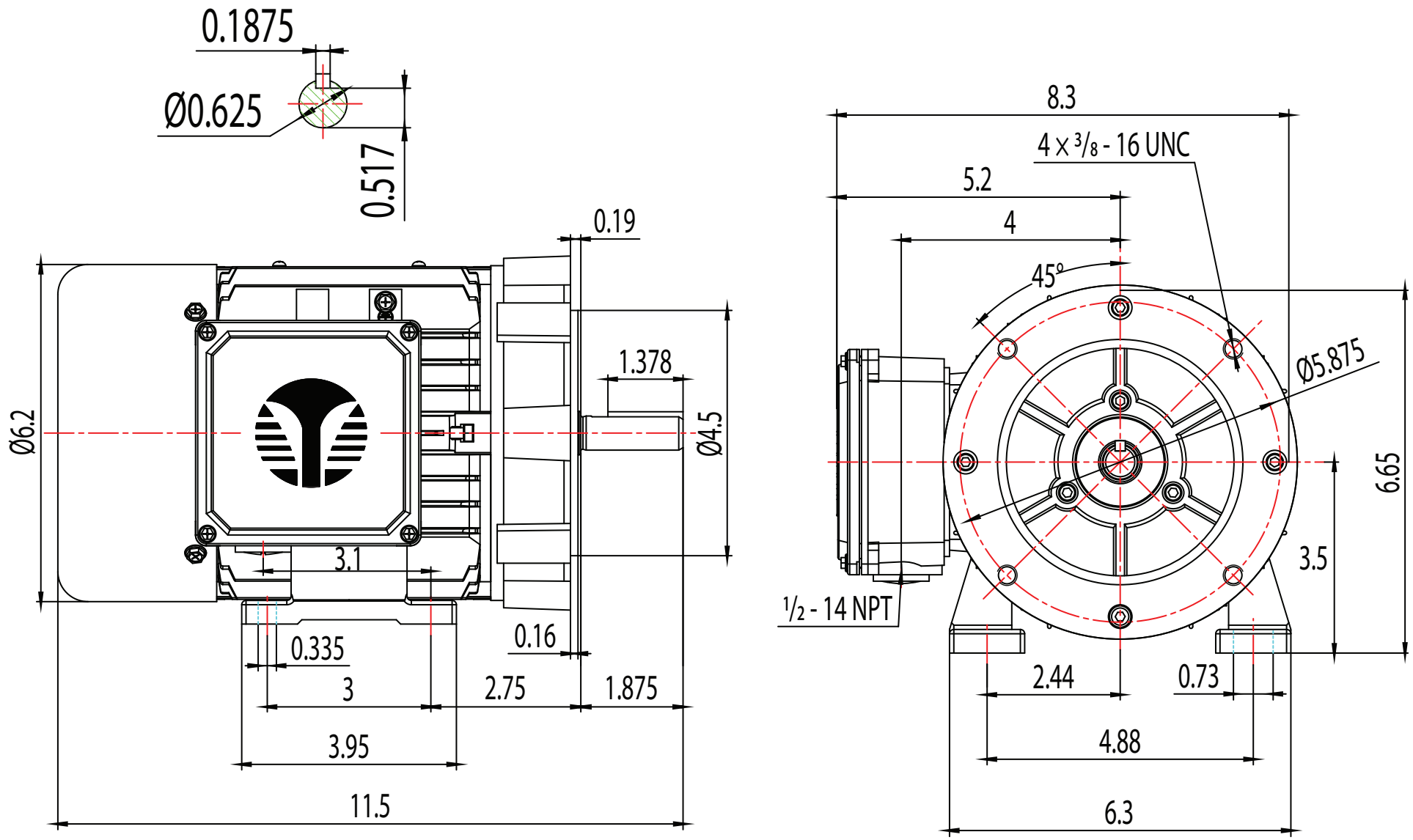

TECHTOP	MODEL NUMBER:	REV.	BY	DATE	CHANGES
	CB3-AL-TF-56C	1			
		2			
	MFG PN:	3			
MATERIAL: ALUMINUM		4			
UNITS: INCH BY: SSEE		5			
DRAWN: 1/3/2019		6			
WWW.TECHTOP.COM		7			