FRAME:	HP:	RPM:	PHASE:	VOLT:	ENCL:	FREQ:	FLA:	LRA:

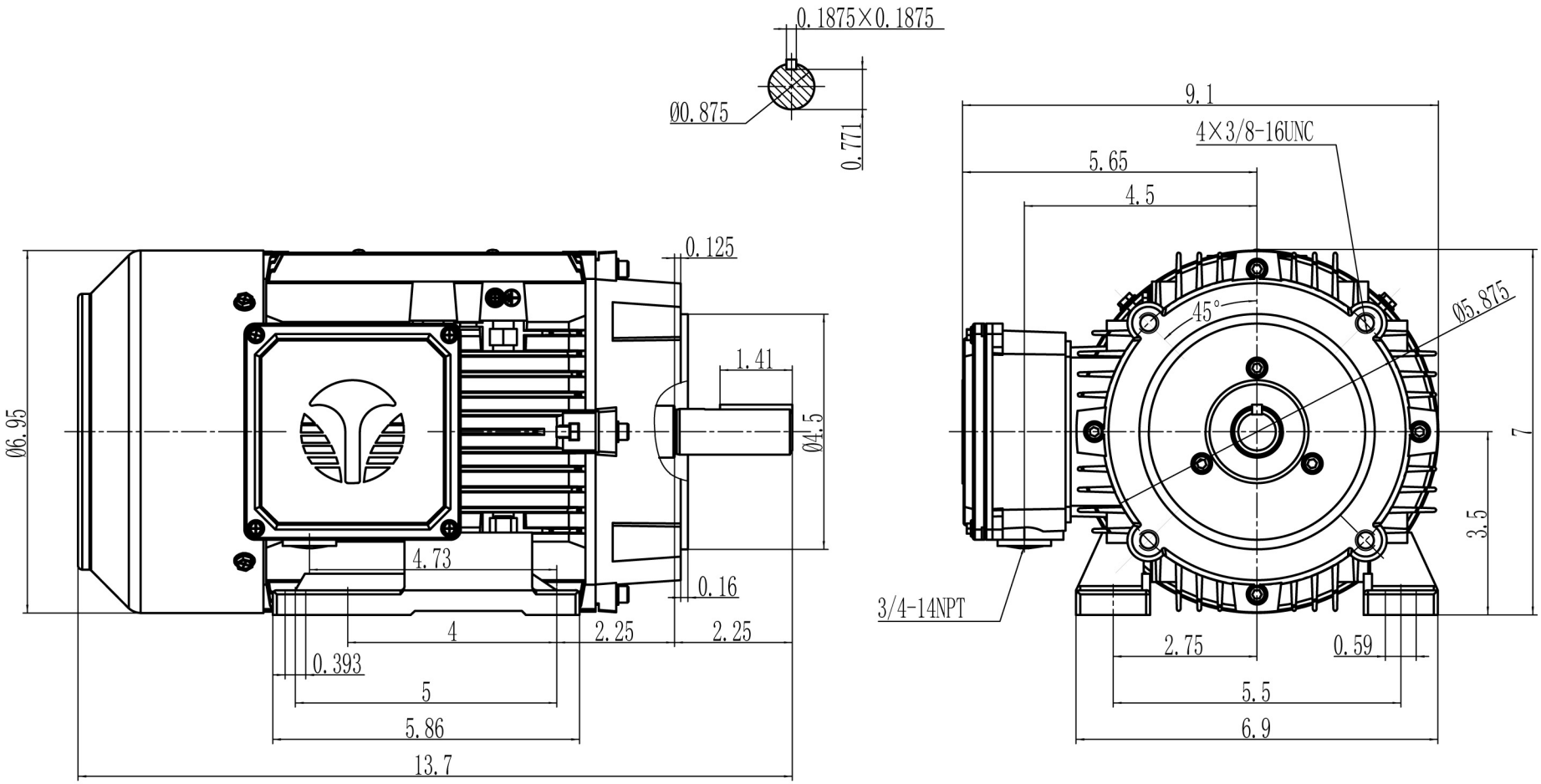

TECHTOP®	MODEL: NEMA140TC	SCALE: 1:2	DATE:	UNITS:	
	REV.DESC:	VERSION:	REVISED:	BY:	
				WWW.TECHTOPIND.COM	