| FRAME: 143TC | HP: | RPM: | PHASE: 3 | VOLT: 208 - 230/460V | ENCL: TEFC | FREQ: 60 Hz | FLA: | LRA: |
|---|---|---|---|---|---|---|---|---|

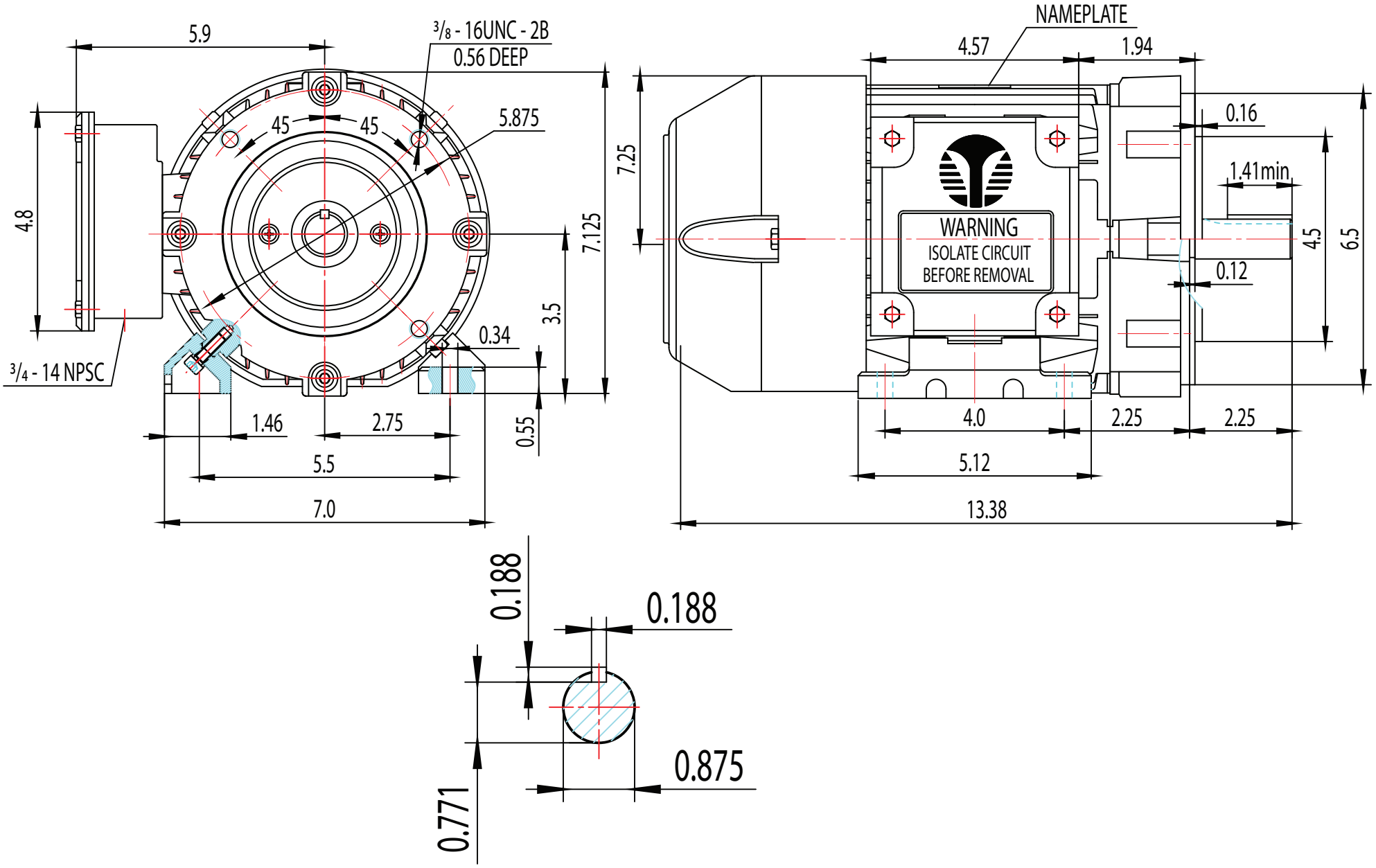


| TECHTOP | MODEL NUMBER: | REV. | BY | DATE | CHANGES |
|---|---|---|---|---|---|
| | GR3-CI-TF-143TC | 1 | | | |
| | | 2 | | | |
| | MFG PN: | 3 | | | |
| MATERIAL: | | 4 | | | |
| UNITS: INCH BY: SSEE | | 5 | | | |
| DRAWN: 6/15/2018 | | 6 | | | |
| WWW.TECHTOP.COM | | 7 | | | |